Cast Steel Bolted Bonnet Valves

CCPV

Materials of Construction: Flange Type Triple Offsets Butterfly Valves

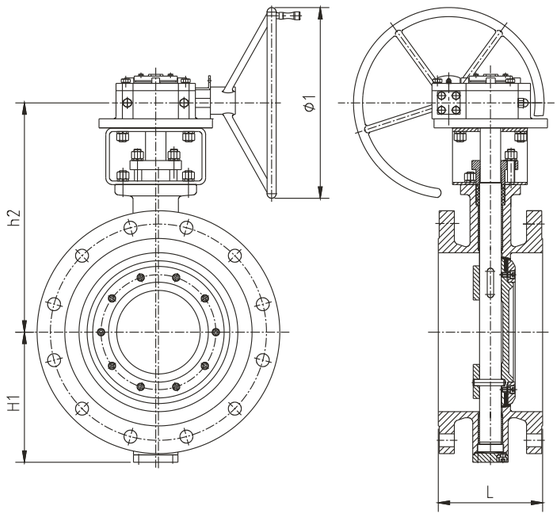

Products Specification

Valve Name	Triple Offsets Butterfly Valve
Pressure Class	150Lb-900Lb
Valve Nominal Size	2"–60"
Design Standard	API609
Test Standard	API 598
Connection Standard	ASME B16.5
Valve Actuator	Lever, Worm Gear
Valve Connection	Double Flange
Valve Structure	Triple Offsets
Water, Air, Oil, Gas, Steam, etc	

Products Main Parts List

Item	Part Name	Part Material				
		CS	CS CF8	CS CF8M	CF8	CF8M
1	Body	WCB	WCB	WCB	CF8	CF8M
2	Disc	WCB	CF8	CF8M	CF8	CF8M
3	Stem	420	F304	F316	F304	F316
4	Seat	13Cr/HF	13Cr/HF	13Cr/HF	Body	Body
5	Seal Ring	SS304+Graphite		SS316+Graphite	SS304+Graphite	
6	Pin	420	F304	F316	F304	F316
7	Stem Packing	PTFE/Graphite				
8	Operator	Worm Gear				

CCPV

Cast Steel Bolted Bonnet Valves

Flange Type Triple Offsets Butterfly Valves • ANSI Class 150

Dimension

Nominal Diameter (mm)	Face to Face Length	Height from Pipe Center (mm)	Height from Pipe Center to Bottom(mm)	Hand wheel Diameter (mm)	Torque (N.M)	Cv	Top Flange ISO–No.
2"(DN50)	108	210	75	203	26	58	F07
2½"(DN65)	112	220	90	203	32	109	F07
3"(DN80)	114	230	95	203	80	165	F07
4"(DN100)	127	240	115	203	142	318	F07
5"(DN125)	140	296	138	305	264	648	F10
6"(DN150)	140	310	147	305	362	932	F10
8"(DN200)	152	350	185	406	785	1970	F12
10"(DN250)	165	402	215	406	1080	2689	F14
12"(DN300)	178	455	252	508	1510	3930	F14
14"(DN350)	190	505	287	508	2458	5290	F16
16"(DN400)	216	560	317	610	2850	7726	F25
18"(DN450)	222	565	342	610	4536	9856	F25
20"(DN500)	229	605	372	610	5474	12180	F25
24"(DN600)	267	675	440	711	8240	19800	F25
28"(DN700)	292	770	505	711	11682	27600	F30
30"(DN750)	318	795	528	762	14340	33700	F30
32"(DN800)	318	845	600	762	17856	35800	F30
36"(DN900)	330	875	645	812	23345	45600	F30
40"(DN1000)	410	975	700	812	28200	65320	F35
48"(DN1200)	470	1170	830	914	44400	96000	F40
56"(DN1400)	530	1290	980	914	64240	139700	F40
60"(DN1500)	530	1375	1030	914	73520	160380	F40

Products Description(DN50~1500)

1. Triple Offsets, Laminate Seal Ring with 13Cr/HF Seat, Single Direction Seal effort.
2. Disc and Stem connection, there are two kinds: Pin connection, Key & Pin Connection.
3. Leakage class for positive direction: Class VI.

Cast Steel Bolted Bonnet Valves

CCPV

Flange Type Triple Offsets Butterfly Valves • ANSI Class 300

Dimension

Nominal Diameter (mm)	Face to Face Length	Height from Pipe Center (mm)	Height from Pipe Center to Bottom(mm)	Hand wheel Diameter (mm)	Torque (N.M)	Cv	Top Flange ISO–No.
2"(DN50)	108	210	82.5	203	78	58	F07
2½"(DN65)	112	225	95	203	88	109	F07
3"(DN80)	114	240	105	203	144	165	F07
4"(DN100)	127	255	127.5	203	258	318	F07
5"(DN125)	140	315	153	305	412	648	F10
6"(DN150)	140	345	178	305	798	682	F12
8"(DN200)	152	400	216	508	1960	1230	F14
10"(DN250)	165	455	247	508	2270	2370	F16
12"(DN300)	178	495	282	610	2780	3520	F16
14"(DN350)	190	555	312	610	5680	4782	F25
16"(DN400)	216	580	349	711	6835	6280	F25
18"(DN450)	222	620	386	762	7356	7980	F30
20"(DN500)	229	670	410	762	10518	10800	F30
24"(DN600)	267	760	491	762	18393	16180	F30
28"(DN700)	292	890	510	812	27478	22410	F35
30"(DN750)	318	930	600	812	32971	27090	F35
32"(DN800)	318	990	630	914	41150	33050	F40
36"(DN900)	330	1050	670	914	53700	42090	F40
40"(DN1000)	410	1120	735	914	68370	48964	F40
48"(DN1200)	470	1180	880	1016	92970	69350	F48
56"(DN1400)	530	1360	940	1016	141600	94390	F48
60"(DN1500)	530	1410	1030	1016	128000	108400	F48

Products Description(DN50~1500)

1. Triple Offsets, Laminate Seal Ring with 13Cr/HF Seat, Single Direction Seal effort.
2. Disc and Stem connection, there are two kinds: Pin connection, Key & Pin Connection.
3. Leakage class for positive direction: Class VI.

CCPV

Cast Steel Bolted Bonnet Valves

Flange Type Triple Offsets Butterfly Valves • ANSI Class 600

Dimension

Nominal Diameter (mm)	Face to Face Length	Height from Pipe Center (mm)	Height from Pipe Center to Bottom(mm)	Hand wheel Diameter (mm)	Torque (N.M)	Cv	Top Flange ISO–No.
2"(DN50)	150	225	82.5	203	162	42	F07
2½"(DN65)	170	245	95	203	208	72	F07
3"(DN80)	180	275	105	305	340	107	F10
4"(DN100)	190	275	137.5	406	633	250	F12
5"(DN125)	200	325	165	508	960	416	F12
6"(DN150)	210	385	200	508	1630	600	F16
8"(DN200)	230	435	232	610	3540	1079	F16
10"(DN250)	250	510	277	610	5462	1708	F25
12"(DN300)	270	535	302	610	6018	2620	F25
14"(DN350)	290	617	329	711	10913	4062	F25
16"(DN400)	310	665	432	762	15757	5292	F30
18"(DN450)	330	715	463	812	19805	7395	F35
20"(DN500)	350	730	492	812	25808	9320	F35
24"(DN600)	390	895	525	914	44799	13578	F40
28"(DN700)	430	925	545	914	66593	20326	F40
30"(DN750)	450	965	565	1016	79506	23400	F48
32"(DN800)	470	1020	670	1016	90160	26370	F48
36"(DN900)	510	1190	730	1016	117500	32816	F48
40"(DN1000)	550	1220	735	1016	155240	40518	F60
48"(DN1200)	630	1280	860	1016	227000	57460	F60
56"(DN1400)	710	1415	980	1016	278000	78210	F60
60"(DN1500)	710	1450	1030	1016	314000	89786	F60

Products Description(DN50~1500)

1. Triple Offsets, Laminate Seal Ring with 13Cr/HF Seat, Single Direction Seal effort.
2. Disc and Stem connection, there are two kinds: Pin connection, Key & Pin Connection.
3. Leakage class for positive direction: Class VI.

Flange Type Triple Offsets Butterfly Valves • ANSI Class 900

Dimension

Nominal Diameter (mm)	Face to Face Length	Height from Pipe Center (mm)	Height from Pipe Center to Bottom(mm)	Hand wheel Diameter (mm)	Torque (N.M)	Cv	Top Flange ISO-No.
4"(DN100)	229	350	180	406	836	210	F14
5"(DN125)	267	395	210	508	1580	348	F16
6"(DN150)	267	410	225	508	2180	500	F16
8"(DN200)	292	455	270	610	4692	923	F16
10"(DN250)	330	510	310	711	6596	1430	F25
12"(DN300)	356	555	340	762	7955	2148	F30
14"(DN350)	381	580	365	812	17838	3025	F30
16"(DN400)	406	610	400	812	23600	4130	F35
18"(DN450)	432	650	445	914	33734	5692	F35
20"(DN500)	457	700	487	914	44707	7430	F40
24"(DN600)	508	920	580	914	67240	10700	F40

Products Description(DN100~600)

1. Triple Offsets, Laminate Seal Ring with 13Cr/HF Seat, Single Direction Seal effort.
2. Disc and Stem connection, there are two kinds: Pin connection, Key & Pin Connection.
3. Leakage class for positive direction: Class VI.

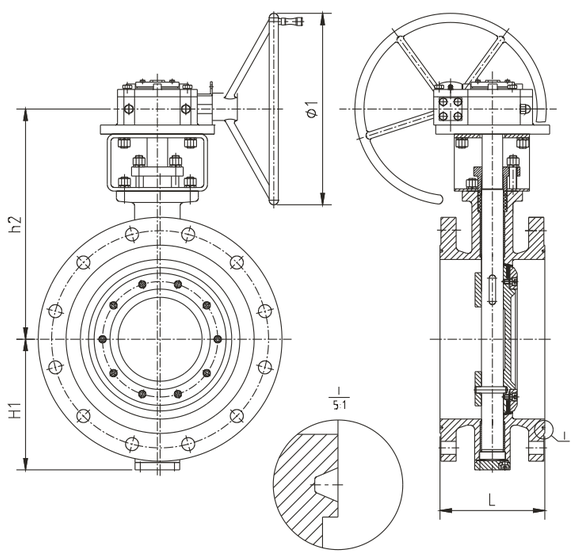

Materials of Construction: Butt-Welding Triple Offsets Butterfly Valves

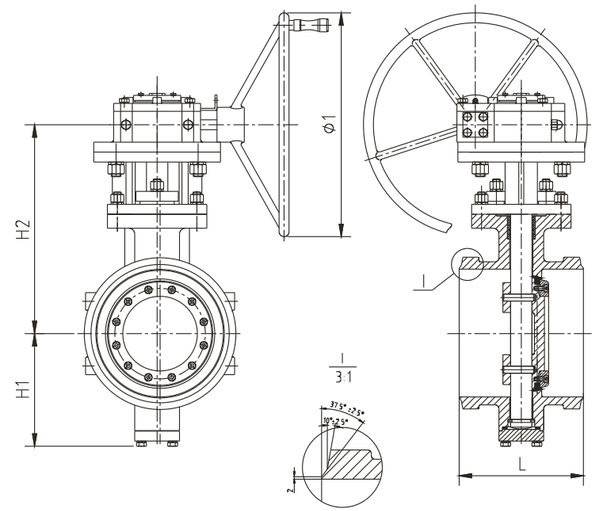

Products Specification

Valve Name	Triple Offsets Butterfly Valve
Pressure Class	150Lb-900Lb
Valve Nominal Size	2"–60"
Design Standard	API609
Test Standard	API 598
Connection Standard	ASME B16.25
Valve Actuator	Lever, Worm Gear
Valve Connection	Welding End
Valve Structure	Triple Offsets
Water, Air, Oil, Gas, Steam, etc	

Products Main Parts List

Item	Part Name	Part Material				
		CS	CS CF8	CS CF8M	CF8	CF8M
1	Body	WCB	WCB	WCB	CF8	CF8M
2	Disc	WCB	CF8	CF8M	CF8	CF8M
3	Stem	420	F304	F316	F304	F316
4	Seat	13Cr/HF	13Cr/HF	13Cr/HF	Body	Body
5	Seal Ring	SS304+Graphite		SS316+Graphite	SS304+Graphite	
6	Pin	420	F304	F316	F304	F316
7	Stem Packing	PTFE/Graphite				
8	Operator	Worm Gear				