Size

1/4" – 4" (Full Port)
2000 WOG
3000 WOG Option

End Connections

NPT
Butt Weld
Socket Weld
Flanged (150#, 300#, 600#)

Valve Materials

316 Stainless Steel
Carbon Steel
Hastelloy C
Monel

Ball and Stem Materials

316 Stainless Steel
Hastelloy B & C
Monel 400
Alloy 20

Seat Materials

Tefon (PTFE)
25% Carbon Filled Tefon
15% Glass Filled Tefon
Kel–F (PCTFE)
PEEK
UHMWPE
Metals

Service Applications

Chemical
Dry/Liquid Chlorine
Food Processing
Hydraulic
Oxygen
Steam
Thermal Fluids
Vacuum
Water/Oil/Gas

Applicable Standards

ASME B16.34
API 598
API 607 4th Edition

1/4" THRU 3/4"

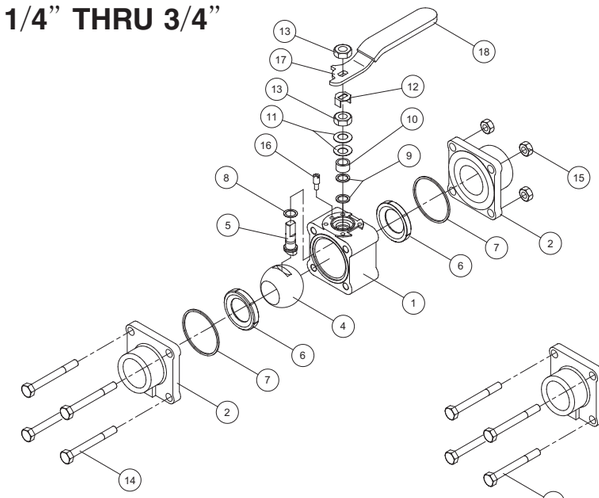

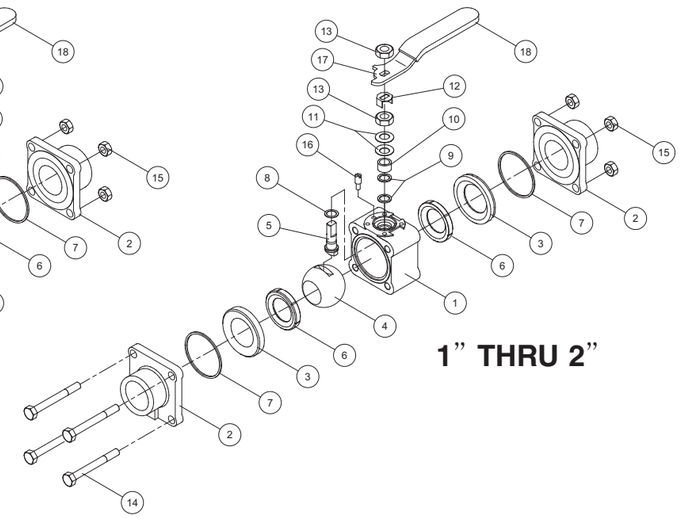

1" THRU 2"

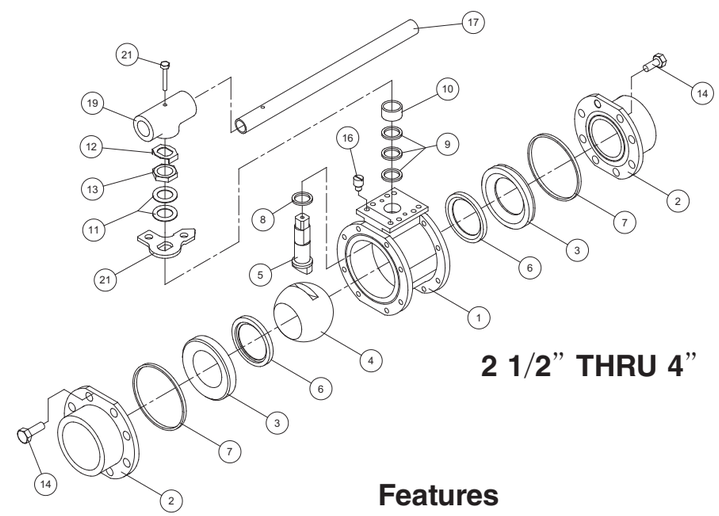

2 1/2" THRU 4"

Features

ANSI Class 150, 300 & 600
2000/3000 WOG
Encapsulated Seats, Seals & Body Bolts
Spring Loaded Stem Packing
Bottom Entry Stem to Prevent Blow–Out
ISO 5211 Mounting Pad
Locking Handle as Standard
Inter–Changeable End Connections

Item	Parts
1	Body
2	End Cap
3	Retainer
4	Ball
5	Stem
6	Ball Seat
7	Body Seal
8	Thrust Washer
9	Packing
10	Gland Ring
11	Disc Spring
12	Lock Tab
13	Stem Nut
14	Body Bolt
15	Body Nut
16	Stop Pin
17	Handle
18	Handle Sleeve
19	Wrench Block
20	Handle Bolt
21	Lock Pad

1/4" THRU 2"

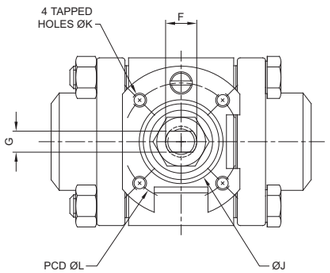

Plan View with Handle Removed

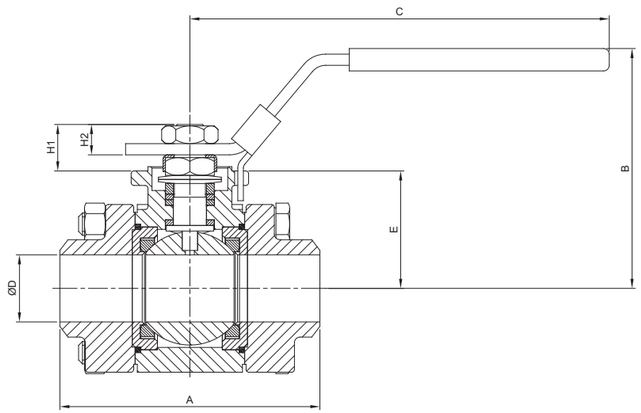

SIZE	A (in.)	B (in.)	C (in.)	D (in.)	E (in.)	F (in.)	G (in.)	H1 (in.)	H2 (in.)	J (in.)	K	L (in.)	ISO 5211	Weight (lbs)	TORQUE (in~lbs)
1/4"	2.61	2.48	4.53	0.36	1.24	0.38	0.22	0.52	0.28	0.98	M5	1.42	F03	2	65
3/8"	2.61	2.48	4.53	0.49	1.24	0.38	0.22	0.52	0.28	0.98	M5	1.42	F03	2	65
1/2"	2.97	2.48	4.53	0.59	1.24	0.38	0.22	0.52	0.28	0.98	M5	1.42	F03	2	65
3/4"	3.17	2.56	4.53	0.75	1.32	0.38	0.22	0.52	0.29	0.98	M5	1.42	F04	2.5	80
1"	3.67	3.38	5.91	0.95	1.65	0.44	0.30	0.65	0.43	1.18	M5	1.65	F04	4	120
1 1/4"	4.37	3.50	5.91	1.18	1.82	0.44	0.30	0.67	0.47	1.18	M5	1.65	F04	6	235
1 1/2"	4.72	3.92	6.85	1.50	1.90	0.57	0.34	1.14	0.60	1.38	M6	1.97	F05	8	290
2"	5.53	4.25	6.85	1.97	2.22	0.57	0.34	1.14	0.60	1.38	M6	1.97	F05	14	450

2 1/2" THRU 4"

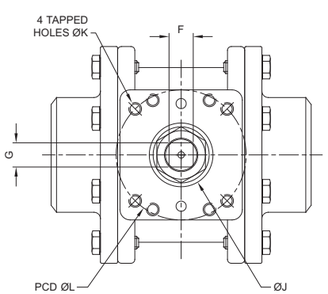

Plan View with Handle Removed

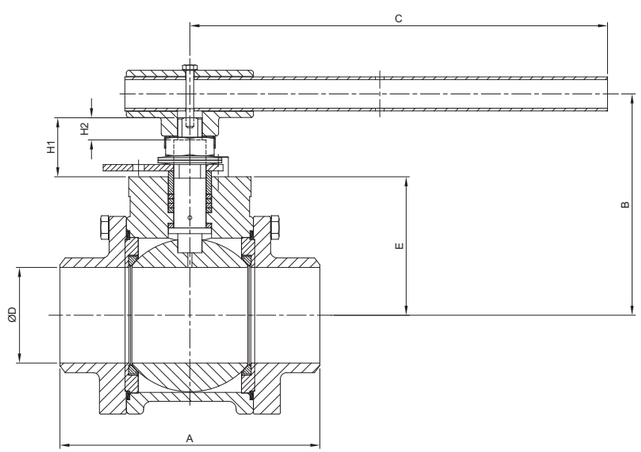

SIZE	A (in.)	B (in.)	C (in.)	D (in.)	E (in.)	F (in.)	G (in.)	H1 (in.)	H2 (in.)	J (in.)	K	L (in.)	ISO 5211	Weight (lbs)	TORQUE (in~lbs)
2 1/2"	7.27	5.28	8.84	2.52	3.25	0.79	0.55	1.65	0.72	1.58	M8	2.76	F07	22	685
3"	8.02	6.84	13.74	2.95	4.28	0.75	0.75	1.82	0.69	1.97	M10	4.02	F10	35	1200
4"	9.46	7.37	13.74	3.78	4.81	0.75	0.75	1.82	0.69	1.97	M10	4.02	F10	55	2000

Standard Flanged Ends (150#, 300#, 600#)

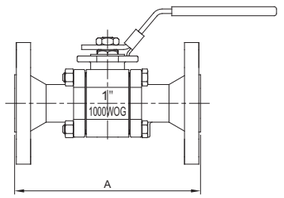

SIZE	A (in.)		
	150#	300#	600#
1/2"	5.50	5.50	6.50
3/4"	6.00	6.00	7.50
1"	6.50	6.50	8.50
1 1/4"	7.00	7.00	9.00
1 1/2"	7.50	7.50	9.50
2"	8.50	8.50	11.50
2 1/2"	9.50	9.50	13.00
3"	11.12	11.12	14.00
4"	12.00	12.00	17.00

Note

Please contact Company if you require fanged ends to be other than standard raised face.

Standard Cut Grooved Ends

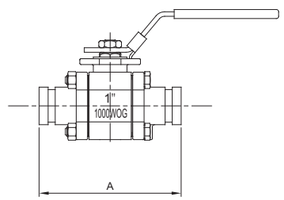

SIZE	A (in.)
3/4"	4.63
1"	5.17
1 1/4"	6.00
1 1/2"	6.50
2"	6.99
2 1/2"	7.88
3"	8.50
4"	10.00

Note

Please contact Company if you requireany other end style than those shown in this literature.

Pressure/Temperature Rating

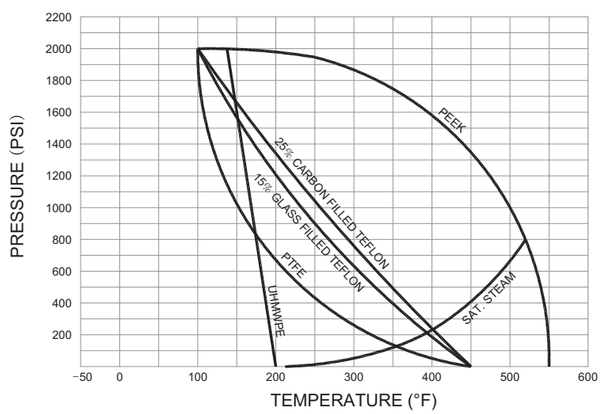

Notes

Please contact Company if you require customized versions of our valves. CAD drawings are available for most variations, including actuators etc.

High Platform Ball Valves • 1000WOG

BUTT WELD END STYLE (SCH 10, SCH 40, SCH 80)

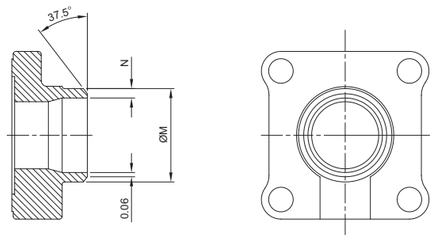

Butt weld ends are square cut where N is less than or equal to 0.12"

SIZE	M (in.)	N (in.)		
		Sch 10	Sch 40	Sch 80
1/4"	0.540	0.065	0.088	0.119
3/8"	0.675	0.065	0.091	0.126
1/2"	0.840	0.083	0.109	0.147
3/4"	1.050	0.083	0.113	0.154
1"	1.315	0.109	0.133	0.179
1 1/4"	1.660	0.109	0.140	0.191
1 1/2"	1.900	0.109	0.145	0.200
2"	2.375	0.109	0.154	0.218
2 1/2"	2.875	0.120	0.203	0.276
3"	3.500	0.120	0.216	0.300
4"	4.500	0.120	0.237	0.337

SOCKET WELD END STYLE

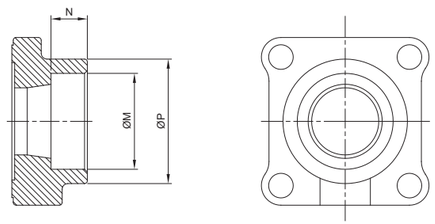

SIZE	M (in.)	N (in.)	P (in.)
1/4"	0.57	0.39	1.00
3/8"	0.71	0.39	1.00
1/2"	0.87	0.39	1.20
3/4"	1.07	0.51	1.42
1"	1.35	0.51	1.75
1 1/4"	1.70	0.51	2.13
1 1/2"	1.94	0.51	2.44
2"	2.43	0.65	2.99
2 1/2"	2.93	0.65	3.62
3"	3.56	0.65	4.33
4"	4.56	0.79	5.59

THREADED NPT END STYLE

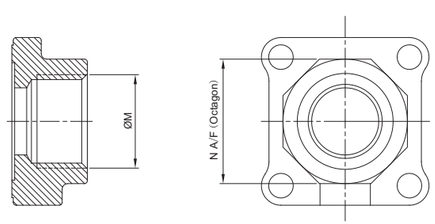

SIZE	M (NPT)	N (in.)
1/4"	1/4	1.00
3/8"	3/8	1.00
1/2"	1/2	1.20
3/4"	3/4	1.42
1"	1	1.75
1 1/4"	1 1/4	2.13
1 1/2"	1 1/2	2.44
2"	2	2.99
2 1/2"	2 1/2	3.62
3"	3	4.33
4"	4	5.59

High Platform Ball Valves HOW TO ORDER

Electric Actuator
- 120 VAC
- 12/24 VDC
- NEMA 4/7
- Positioners 4–20 mA
- Reversing
- Telemetry
- Battery Back–up
- Spring Return

Pneumatic Actuator
- Double Acting
- Spring Return
- Solenoid Valves
- Limit Switches
- Positioners 3–15 psi
- Positioners 4–20 mA
- Intelligent Postioner
- Declutchable Manual Override

Manual Valves
- Oval Handle
- Spring Return
- Fusible Link
- Lock Device
- Gear Operators

HOW TO ORDER

1"	Socket Weld Ball Valve	ASTM A105	304 SS	PTFE	Graphoil	600	Air-operated
Size	**Series**	**Body & End Material**	**Ball & Stem Material**	**Seat Material**	**Seal Material**	**End Style**	**Options**
1/4"	Butt Welding Ball Valve	ASTM A105	ASTM A105	25% Carbon PTFE	Graphoil	150 – Class150Lb	Lever Handle
3/8"	Socket Weld Ball Valve	304 SS	304 SS	15% Glass PTFE	PTFE	300 – Class300Lb	Air-operated
1/2"	NationalPipeThread Ball Valve	316 SS	316 SS	Tefon (PTFE)		600 – Class600Lb	
3/4"			ASTM A182 F6a	PEEK			
1"				DEVLON			
1 1/4"				Nylon			
1 1/2"							
2"							
2 1/2"							
3"							
4"							